TRB142

v1.0

Copyright © 2025, UAB TELTONIKA NETWORKS. Specifications and information given in this document are subject to change by UAB TELTONIKA NETWORKS without prior notice.

HARDWARE

FRONT VIEW

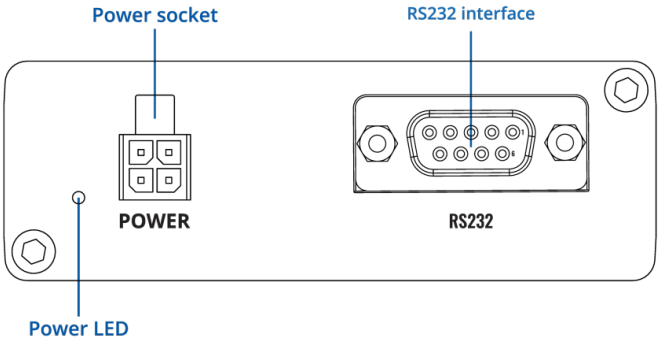

BACK VIEW

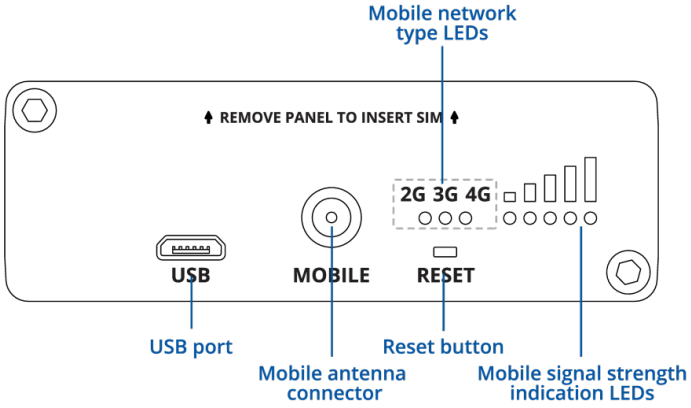

POWER SOCKET PINOUT

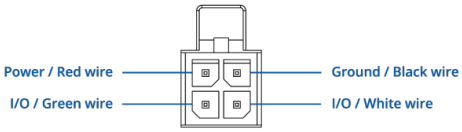

RS232 CONNECTOR PINOUT

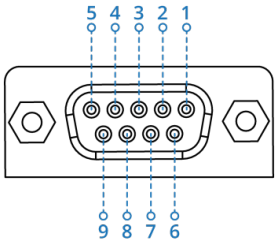

Copyright © 2025, UAB TELTONIKA NETWORKS. Specifications and information given in this document are subject to change by UAB TELTONIKA NETWORKS without prior notice.

FEATURES

Mobile

Mobile module	4G LTE Cat 1 up to 10 DL/5 UL Mbps; 3G up to 384 DL/384 UL kbps; 2G up to 296 DL/236.8 UL kbps
3GPP Release	Release 12
Status	IMSI, ICCID, operator, operator state, data connection state, network type, bandwidth, connected band, signal strength (RSSI), SINR, RSRP, RSRQ, EC/IO, RSCP, data sent/received, LAC, TAC, cell ID, ARFCN, UARFCN, EARFCN, MCC, and MNC
SMS	SMS status, SMS configuration, EMAIL to SMS, SMS to EMAIL, SMS to HTTP, SMS to SMS, scheduled SMS, SMS autoreply, SMPP
USSD	Supports sending and reading Unstructured Supplementary Service Data messages
Block/Allow list	Operator block/allow list (by country or separate operators)
Multiple PDN	Possibility to use different PDNs for multiple network access and services
Band management	Band lock, Used band status display
SIM PIN code management	SIM PIN code management enables setting, changing, or disabling the SIM card's PIN
APN	Auto APN
Bridge	Direct connection (bridge) between mobile ISP and device on LAN
Passthrough	Gateway assigns its mobile WAN IP address to another device on LAN

Copyright © 2025, UAB TELTONIKA NETWORKS. Specifications and information given in this document are subject to change by UAB TELTONIKA NETWORKS without prior notice.

Network

Routing	Static routing
Network protocols	TCP, UDP, IPv4, IPv6, ICMP, NTP, DNS, HTTP, HTTPS, FTP, SMTP, SSL v3, TLS, ARP, VRRP, PPP, PPPoE, UPNP, SSH, DHCP, Telnet, SMPP, SNMP, MQTT
VoIP passthrough support	H.323 and SIP-alg protocol NAT helpers, allowing proper routing of VoIP packets
Connection monitoring	Ping Reboot, Wget Reboot, Periodic Reboot, LCP and ICMP for link inspection
Firewall	Port forward, traffic rules, custom rules, TTL target customisation
Firewall status page	View all your Firewall statistics, rules, and rule counters
Ports management	View device ports, enable and disable each of them, turn auto-configuration on or off, change their transmission speed, and so on
Network topology	Visual representation of your network, showing which devices are connected to which other devices
DHCP	Static and dynamic IP allocation, DHCP relay, DHCP server configuration, status, static leases: MAC with wildcards
QoS / Smart Queue Management (SQM)	Traffic priority queuing by source/destination, service, protocol or port, WMM, 802.11e
DDNS	Supported >25 service providers, others can be configured manually
DNS over HTTPS	DNS over HTTPS proxy enables secure DNS resolution by routing DNS queries over HTTPS
Network backup	Mobile, VRRP, Wired options, each of which can be used as an automatic Failover
SSHFS	Possibility to mount remote file system via SSH protocol
Traffic Management	Real-time monitoring, wireless signal charts, traffic usage history

Copyright © 2025, UAB TELTONIKA NETWORKS. Specifications and information given in this document are subject to change by UAB TELTONIKA NETWORKS without prior notice.

Security

Authentication	Pre-shared key, digital certificates, X.509 certificates, TACACS+, Internal & External RADIUS users authentication, IP & login attempts block, time-based login blocking, built-in random password generator
Firewall	Preconfigured firewall rules can be enabled via WebUI, unlimited firewall configuration via CLI, DMZ, NAT, NAT-T, NAT64
Attack prevention	DDOS prevention (SYN flood protection, SSH attack prevention, HTTP/HTTPS attack prevention), port scan prevention (SYN-FIN, SYN-RST, X-mas, NULL flags, FIN scan attacks)
VLAN	Port and tag-based VLAN separation
Mobile quota control	Mobile data limit, customizable period, start time, warning limit, phone number
WEB filter	Blacklist for blocking out unwanted websites, Whitelist for specifying allowed sites only
Access control	Flexible access control of SSH, Web interface, CLI and Telnet
SSL certificate generation	Let's Encrypt and SCEP certificate generation methods

Copyright © 2025, UAB TELTONIKA NETWORKS. Specifications and information given in this document are subject to change by UAB TELTONIKA NETWORKS without prior notice.

VPN

OpenVPN	Multiple clients and a server can run simultaneously, 27 encryption methods
OpenVPN Encryption	DES-CBC 64, RC2-CBC 128, DES-EDE-CBC 128, DES-EDE3-CBC 192, DESX-CBC 192, BF-CBC 128, RC2-40-CBC 40, CAST5-CBC 128, RC2-64-CBC 64, AES-128-CBC 128, AES-128-CFB 128, AES-128-CFB1 128, AES-128-CFB8 128, AES-128-OFB 128, AES-128-GCM 128, AES-192-CFB 192, AES-192-CFB1 192, AES-192-CFB8 192, AES-192-OFB 192, AES-192-CBC 192, AES-192-GCM 192, AES-256-GCM 256, AES-256-CFB 256, AES-256-CFB1 256, AES-256-CFB8 256, AES-256-OFB 256, AES-256-CBC 256
IPsec	XFRM, IKEv1, IKEv2, with 14 encryption methods for IPsec (3DES, DES, AES128, AES192, AES256, AES128GCM8, AES192GCM8, AES256GCM8, AES128GCM12, AES192GCM12, AES256GCM12, AES128GCM16, AES192GCM16, AES256GCM16)
GRE	GRE tunnel, GRE tunnel over IPsec support
PPTP, L2TP	Client/Server instances can run simultaneously, L2TPv3, L2TP over IPsec support
Stunnel	Proxy designed to add TLS encryption functionality to existing clients and servers without any changes in the program's code
DMVPN	Method of building scalable IPsec VPNs, Phase 2 and Phase 3 and Dual Hub support
SSTP	SSTP client instance support
ZeroTier	ZeroTier VPN client support
WireGuard	WireGuard VPN client and server support
Tinc	Tinc offers encryption, authentication and compression in it's tunnels. Client and server support.

OPC UA

Supported modes	Client, Server
Supported connection types	TCP

MODBUS

Supported modes	Server, Client
Supported connection types	TCP, RTU(RS232)
Custom registers	MODBUS TCP custom register block requests, which read/write to a file inside the router, and can be used to extend MODBUS TCP Client functionality
Supported data formats	8-bit: INT, UINT; 16-bit: INT, UINT (MSB or LSB first); 32-bit: float, INT, UINT (ABCD (big-endian), DCBA (little-endian), CDAB, BADC), HEX, ASCII

Copyright © 2025, UAB TELTONIKA NETWORKS. Specifications and information given in this document are subject to change by UAB TELTONIKA NETWORKS without prior notice.

DATA TO SERVER

Protocol	HTTP(S), MQTT, Azure MQTT
Data to server	Extract parameters from multiple sources and different protocols, and send them all to a single server; Custom LUA scripting, allowing scripts to utilize the router's Data to server feature

MQTT Gateway

Modbus MQTT Gateway	Allows sending commands and receiving data from MODBUS Server through MQTT broker

DNP3

Supported modes	Station, Outstation
Supported connection	TCP, RTU(RS232)

DLMS/COSEM

DLMS Support	DLMS - standard protocol for utility meter data exchange
Supported modes	Client
Supported connection types	TCP, RTU(RS232)

API

Teltonika Networks Web API (beta) support	Expand your device's possibilities by using a set of configurable API endpoints to retrieve or change data. For more information, please refer to this documentation: https://developers.teltonika-networks.com

Copyright © 2025, UAB TELTONIKA NETWORKS. Specifications and information given in this document are subject to change by UAB TELTONIKA NETWORKS without prior notice.

Monitoring & Management

WEB UI	HTTP/HTTPS, status, configuration, FW update, CLI, troubleshoot, multiple event log servers, firmware update availability notifications, event log, system log, kernel log, Internet status
FOTA	Firmware update from server, automatic notification
SSH	SSH (v1, v2)
SMS	SMS status, SMS configuration
Call	Reboot, Status, Mobile data on/off, Output on/off, answer/hang-up with a timer
TR-069	OpenACS, EasyCwmp, ACSLite, tGem, LibreACS, GenieACS, FreeACS, LibCWMP, Friendly tech, AVSystem
MQTT	MQTT Broker, MQTT publisher
SNMP	SNMP (v1, v2, v3), SNMP Trap, Brute force protection
JSON-RPC	Management API over HTTP/HTTPS
RMS	Teltonika Remote Management System (RMS)

IoT Platforms

ThingWorx	Allows monitoring of: WAN Type, WAN IP, Mobile Operator Name, Mobile Signal Strength, Mobile Network Type
Cumulocity - Cloud of Things	Allows monitoring of: Device Model, Revision and Serial Number, WAN Type and IP, Mobile Cell ID, ICCID, IMEI, Connection Type, Operator, Signal Strength. Has reboot and firmware upgrade actions
Azure IoT Hub	Can be configured with Data to Server to send all the available parameters to the cloud. Has Direct method support which allows to execute RutOS API calls on the IoT Hub. Also has Plug and Play integration with Device Provisioning Service that allows zero-touch device provisioning to IoT Hubs
AWS IoT Core	Utility to interact with the AWS cloud platform. Jobs Support: Call the device's API using AWS Jobs functionality

System Characteristics

CPU	ARM Cortex-A7 1.2 GHz
RAM	128 MB, DDR2
FLASH storage	512 MB, SPI Flash

Copyright © 2025, UAB TELTONIKA NETWORKS. Specifications and information given in this document are subject to change by UAB TELTONIKA NETWORKS without prior notice.

Firmware / Configuration

WEB UI	Update FW from file, check FW on server, configuration profiles, configuration backup
FOTA	Update FW
RMS	Update FW/configuration for multiple devices at once
Keep settings	Update FW without losing current configuration
Factory settings reset	A full factory reset restores all system settings, including the IP address, PIN, and user data to the default manufacturer's configuration

FIRMWARE CUSTOMISATION

Operating system	RutOS (OpenWrt based Linux OS)
Supported languages	Busybox shell, Lua, C, C++, and Python in Package manager
Development tools	SDK package with build environment provided
GPL customization	You can create your own custom, branded firmware and web page application by changing colours, logos, and other elements in our firmware to fit your or your clients' needs
Package Manager	The Package Manager is a service used to install additional software on the device

Input / Output

Configurable I/O	2 x Configurable Inputs/Outputs. Digital input 0 - 5 V detected as logic low, 8 - 30 V detected as logic high. Open collector Configurable I/O output, max output 30 V, 300 mA. Configurable Inputs/Outputs are not available in TRB142*2****
Output control	HTTP POST/GET, Schedule
Events	Email, RMS, SMS
I/O juggler	Allows to set certain I/O conditions to initiate event

Power

Connector	4-pin industrial DC power socket
Input voltage range	9 – 30 VDC, reverse polarity protection; surge protection >31 VDC 10us max
Power consumption	< 5 W

Copyright © 2025, UAB TELTONIKA NETWORKS. Specifications and information given in this document are subject to change by UAB TELTONIKA NETWORKS without prior notice.

Physical Interfaces

I/O's	2 x Configurable I/O pins on 4 pin power connector (I/O not available in TRB142*2****)
Status LEDs	3 x connection type status LEDs, 5 x connection strength LEDs, 1 x Power LED
SIM	1 x SIM slot (Mini SIM – 2FF), 1.8 V/3 V
Power	1 x 4-pin power connector
Antennas	1 x SMA for LTE
USB	1 x Virtual network interface via micro USB
RS232	1 x DB9 socket
Reset	Reboot/User default reset/Factory reset button

Physical Specification

Casing material	Aluminium housing
Dimensions (W x H x D)	74.5 x 25 x 64.4 mm
Weight	135 g
Mounting options	DIN rail, wall mount, flat surface (all require additional kit)

Operating Environment

Operating temperature	-40 °C to 75 °C
Operating humidity	10% to 90% non-condensing
Ingress Protection Rating	IP30

Regulatory & Type Approvals

Regulatory	CE, UKCA, EAC, UCRF, ANRT, Kenya, ICASA, Anatel, Arcotel, NOM, RCM, Giteki, NTC, SRRC, NAL, NBTC, CB
Operator	Deutsche Telekom AG

Copyright © 2025, UAB TELTONIKA NETWORKS. Specifications and information given in this document are subject to change by UAB TELTONIKA NETWORKS without prior notice.

EMC Emissions & Immunity

Standards	Draft EN 301 489-1 V2.2.0 Draft EN 301 489-52 V1.1.0
ESD	EN 61000-4-2:2009
Radiated Immunity	EN IEC 61000-4-3:2006 + A1:2008 + A2:2010
EFT	EN 61000-4-4:2012
Surge Immunity (AC Mains Power Port)	EN 61000-4-5:2014
CS	EN 61000-4-6:2014
DIP	EN 61000-4-11:2004

RF

Standards	EN 301 511 V12.5.1 EN 301 908-1 V13.1.1 EN 301 908-2 V13.1.1 EN 301 908-13 V13.1.1

Safety

Standards	**CE**: EN 62368-1:2014 + A11:2017, EN IEC 62232:2020, EN 50385:2017 **UL/CSA Safety**: UL 62368-1 (3rd Ed., Rev. December 13, 2019), CAN/CSA C22.2 No. 62368-1:19 (3rd Ed., Rev. December 13, 2019) **RCM**: AS/NZS 62368.1:2018 **CB**: IEC 62368-1:2018

Copyright © 2025, UAB TELTONIKA NETWORKS. Specifications and information given in this document are subject to change by UAB TELTONIKA NETWORKS without prior notice.

ORDERING

STANDARD PACKAGE*

TRB142

9W PSU

1 X MOBILE MAGNETIC SMA ANTENNA

MICRO-USB CABLE (0.8M)

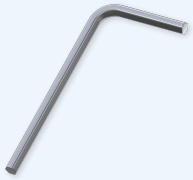

1 X HEX KEY

QSG (QUICK START GUIDE)

- TRB142
- 9 W PSU
- 1x Mobile antenna (magnetic mount, SMA male, 3 m cable)
- Micro-USB cable (0.8 m)
- 1x hex key
- QSG (Quick Start Guide)
- Packaging box

*Standard package contents may differ based on standard order codes.

For more information on all available packaging options – please contact us directly.

CLASSIFICATION CODES

HS Code: 851762

HTS: 8517.62.00

Copyright © 2025, UAB TELTONIKA NETWORKS. Specifications and information given in this document are subject to change by UAB TELTONIKA NETWORKS without prior notice.

AVAILABLE VERSIONS

TRB142 **0***** Europe[1], The Middle East[1], Africa, Korea, Thailand, India, Malaysia	**4G (LTE-FDD)**: B1, B3, B7, B8, B20, B28A **3G**: B1, B8 **2G**: B3, B8	TRB142003000 / Standard package with EU PSU TRB142006000 / Standard package with UK PSU TRB14200A600 / Mass packing code
TRB142 **1***** South America, Australia, New Zealand, Taiwan	**4G (LTE-FDD)**: B1, B2[2], B3, B4, B5, B7, B8, B28 **4G (LTE-TDD)**: B40 **3G**: B1, B2, B5, B8 **2G**: B2, B3, B5, B8	TRB142108000 / Standard package with AU PSU TRB142107000 / Standard package with US PSU TRB142103000 / Standard package with EU PSU TRB14210A200 / Standard package with Universal PSU TRB14210A600 / Mass packing code
TRB142 **4***** Japan	**4G (LTE-FDD)**: B1, B3, B8, B18, B19, B26	TRB14240A700 / Standard package with JP PSU TRB14240A600 / Mass packing code

The price and lead-times for region (operator) specific versions may vary. For more information please contact us.

1 - Regional availability - excluding Russia, Belarus & Iran
2 - LTE-FDD B2 does not support Rx-diversity

TRB142 SPATIAL MEASUREMENTS

PHYSICAL SPECIFICATION

Device housing*:	74.5 x 25 x 64.4 mm
Box:	173 x 71 x 148 mm
	*Housing measurements are presented without antenna connectors and screws; for measurements of other device elements look to the sections below.

Copyright © 2025, UAB TELTONIKA NETWORKS. Specifications and information given in this document are subject to change by UAB TELTONIKA NETWORKS without prior notice.

TOP VIEW

The figure below depicts the measurements of device and its components as seen from the top:

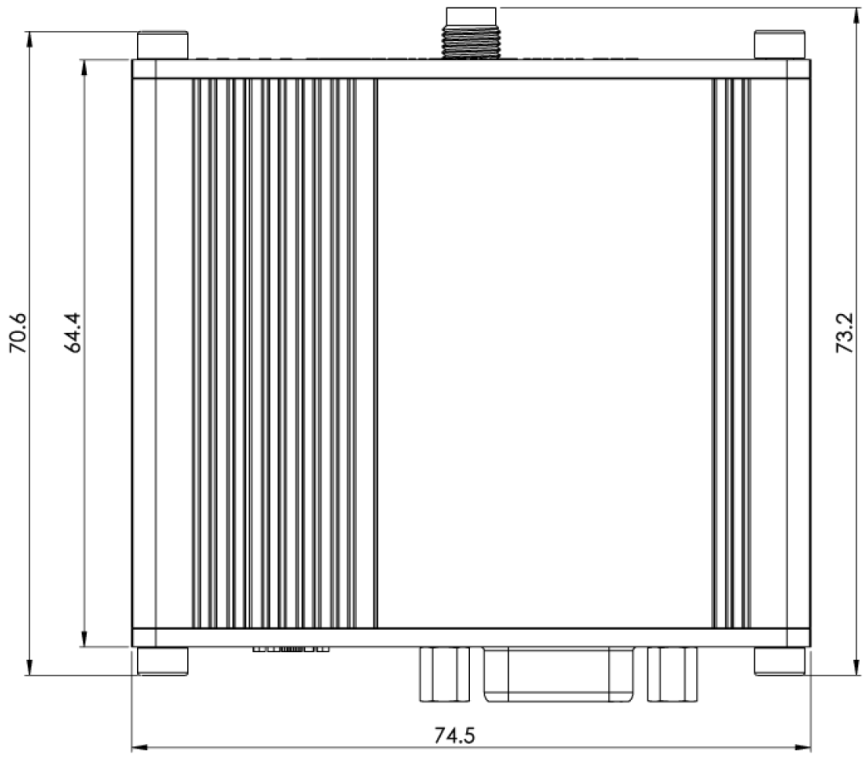

RIGHT VIEW

The figure below depicts the measurements of device and its components as seen from the right:

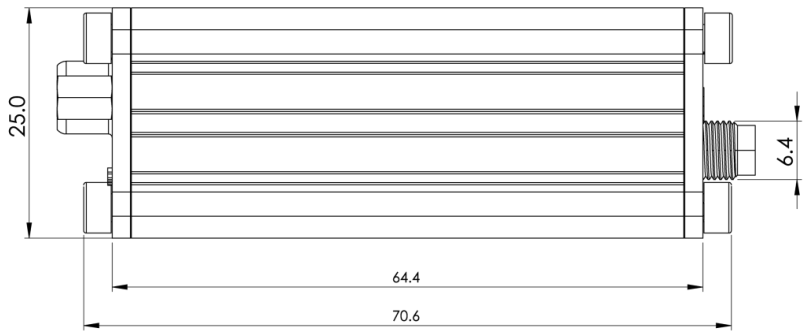

Copyright © 2025, UAB TELTONIKA NETWORKS. Specifications and information given in this document are subject to change by UAB TELTONIKA NETWORKS without prior notice.

REAR VIEW

The figure below depicts the measurements of device and its components as seen from the back panel side:

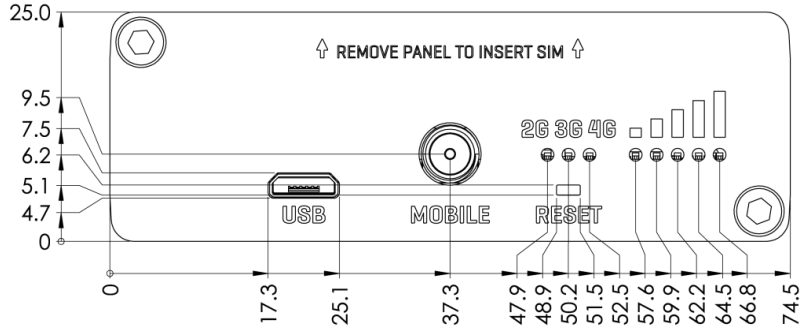

FRONT VIEW

The figure below depicts the measurements of device and its components as seen from the front panel side:

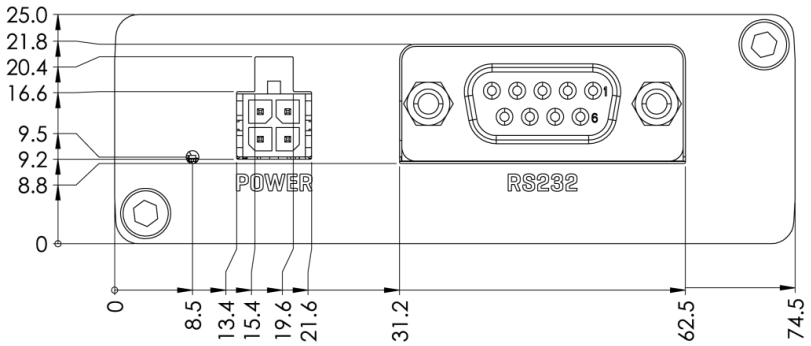

Copyright © 2025, UAB TELTONIKA NETWORKS. Specifications and information given in this document are subject to change by UAB TELTONIKA NETWORKS without prior notice.

MOUNTING SPACE REQUIREMENTS

The figure below depicts an approximation of the device's dimensions when cables and antennas are attached:

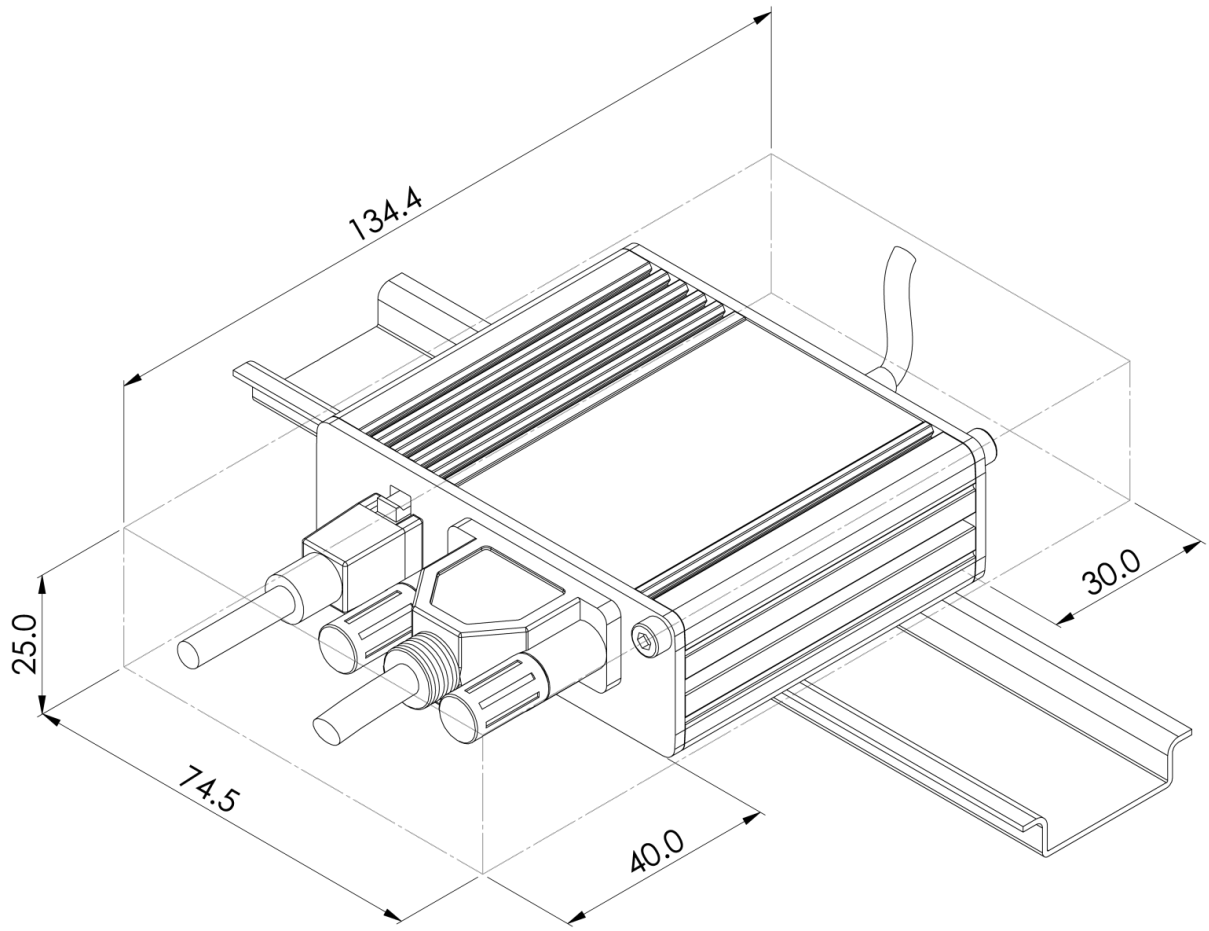

Copyright © 2025, UAB TELTONIKA NETWORKS. Specifications and information given in this document are subject to change by UAB TELTONIKA NETWORKS without prior notice.